LINK®

BiMobile Dual Mobility System

Cementless & Cemented

CE 0482

Explanation of Pictograms			
	Manufacturer	REF	Item number
MAT	Material (number)	CE	Product meets the applicable requirements, which are regulated in the EU harmonization legislation for the affixing of the CE marking.

BiMobile Dual Mobility System
Cementless & Cemented

02 Surgical Technique
02 Preoperative Planning
03 Preparation and Implantation

10 Implants
12 BiMobile Dual Mobility System – Shells, Cemented
13 BiMobile Dual Mobility System – TiCaP Shells, Cementless
14 BiMobile Dual Mobility System – Liner
15 BiMobile Dual Mobility System – Liner, E-Dur

16 Instruments
16 Instrument Set 1 for BiMobile Dual Mobility System
18 Instrument Set 2 for BiMobile Dual Mobility System, Option 1
19 Instrument Set 2 for BiMobile Dual Mobility System, Option 2
20 Instrument Sets for LINK Acetabular Reamers

22 Additional Instruments - Accessories
22 Additional Instruments
22 X-ray Templates

23 Indications/Contraindications

24 Notes

Important Information

Preoperative Planning

It is important to plan the intervention preoperatively in order to select the correct implant type and size and its final intraosseous position based on the patients individual anatomy. The surgeon should perform a careful evaluation of the patient´s clinical condition and consider the level of physical activity before performing a hip replacement.

For optimal results, the surgery should be planned in advance using the appropriate templates.
The magnification factor of the X-rays must be compatible with the factor on the templates.
Special BiMobile X-ray templates are available in standard 1.1:1.

The implant size must be chosen from adequate AP and ML X-rays with sufficient legibility. Each X-ray should be large enough for application of the whole template. A second X-ray of the unaffected joint is often helpful. Inadequate pre-operative planning can lead to improper selection of the implants and/or incorrect implant positioning.

Note
Preoperative planning provides an initial estimation of the final situation but cannot conclusively determine the most adequate size to be used. The ultimate decision can only be taken intraoperatively.

In principle, a load-bearing, stable acetabular fossa and solid lateral osseous coverage is desirable.
To achieve a press-fit with primary stability, the osseous circumference of the acetabulum must be well preserved.

The **inclination** of the cup should not be significantly above or below 45°.
The **anteversion** should not be significantly above or below 15°.

Placement outside of these boundaries will result in reduced range of motion and could subsequently lead to subluxation and/or dislocation of the joint.

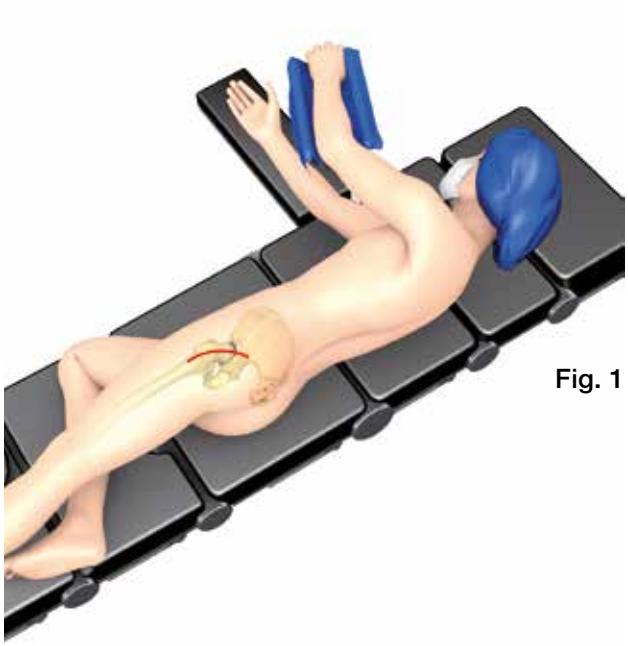

Fig. 1

Preparation and Implantation

Surgical Exposure

The BiMobile system can be implanted using any of the standard approaches for total hip replacement depending on the surgeon's experience (Fig. 1).

Acetabular Reaming

Depending on the approach used, the leg is positioned such that the acetabulum is well exposed.

Fig. 2

The initial reamer size corresponds to the width of the acetabular cup entrance. In normal anatomy the reamer is inserted into the acetabulum at approximately 45 degrees inclination and 15 degrees anteversion (Fig. 2).

Consecutive reamers with increasing diameters are applied until areas of bloody subchondral compacta become visible but without compromising the supportive structure for secure anchoring of the Shell. It is essential to keep the reamer head absolutely steady.

Fig. 3

Determination of Shell Size

Following preparation of the acetabulum, the Trial Cup is attached to the Impactor Handle 183-150/03 (Fig. 3) and is inserted into the acetabulum.

Fig. 4

The Trial Cup is used to determine the size of the Shell as the reamed cavity may be larger than originally intended. As soon as the trial is firmly seated in the reamed acetabulum the corresponding size of the Shell is to be selected (Fig. 4).

Implantation of the Shell

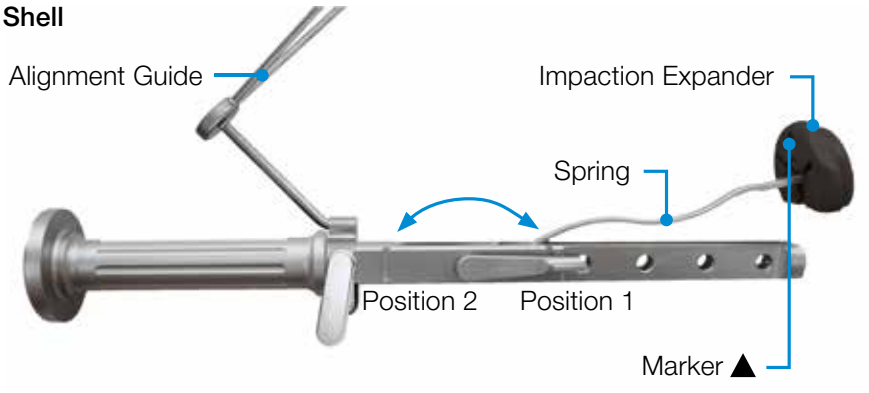

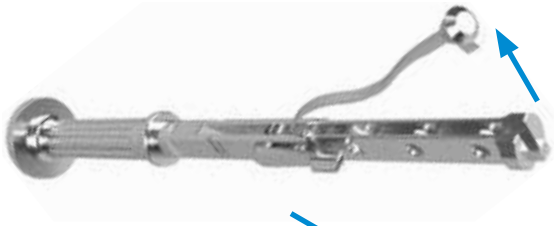

Fig. 5

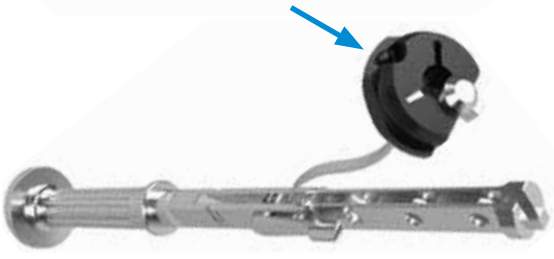

Fig. 6

The lever of the Impactor Handle 184-330/00 is moved into Position 1. Lift the spring and place the Impaction Expander on it with the marker visible and pointing upwards (Fig. 5-6).

Note
Select the Impaction Expander corresponding to the cup size to be implanted. It is supported by a color coding.

Fig. 7

Slightly push the Impaction Expander such that it connects with the spring's taper. Move it downwards until it "clicks" into its final position on the Impactor Handle 184-330/00 (Fig. 7).

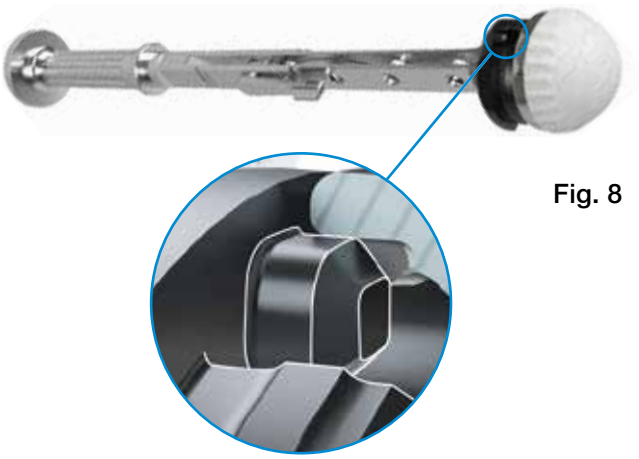

Fig. 8

The Shell is attached to the Impaction Expander with the nose of the Adapter aligned to the notch of the Shell (Fig.8).

Fig. 9

Then the lever of the Impactor Handle 184-330/00 is brought into Position 2 (Fig. 9).

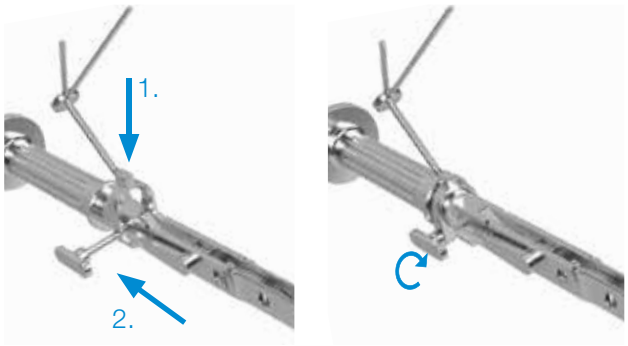

Fig. 10

Attach the Alignment Guide to the Impactor Handle 184-330/00 in such way that the Alignment Guide aligns exactly in the direction of the Marker on the Impaction Expander. For this the Alignment Guide is put on the Impactor Handle 184-330/00 (1.), slidden back (2.) and is then fixed by tightening the screw. According to the patient‘s side to be treated, take the prevailing rod (L = left side or R = right side) for the guidance (Fig. 10).

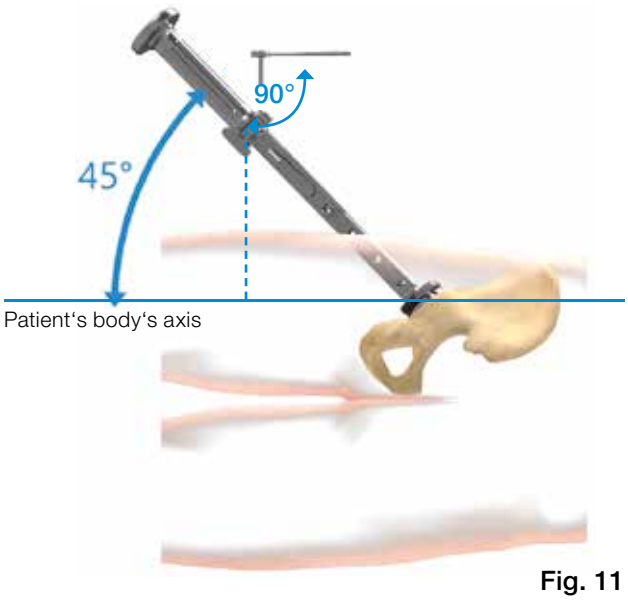

Fig. 11

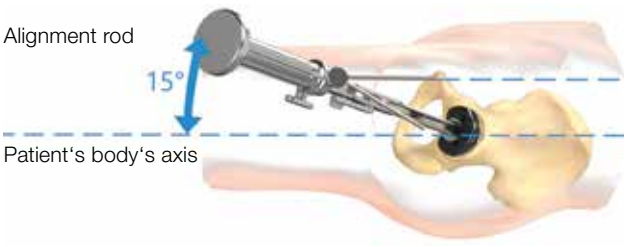

Fig. 12

The Shell is aligned for 45° inclination using the corresponding Alignment Guide which is attached to the Impactor Handle 184-330/00. The Alignment Guide should be 90° to the body’s axis. To achieve 15° anteversion the Impactor Handle 184-330/00 is oriented such that the Alignment Rod is in parallel to the patient’s body (Fig. 11-12).

Fig. 13

Fig. 14

Fig. 15

Fig. 16

Note
After alignment of the Shell with the Rim Impactor an additional impaction with the Final Shell Impactor is required to ensure a secure seating of the Shell.

Cementless Cup

The cementless Shells are designed with a built-in equatorial press-fit of ~2 mm, e.g. Shell size: 52 mm → actual size: 54 mm. The intraoperative press-fit depends on the last used Acetabular Reamer as shown in the Table below.

Shell Size on label (mm)	Last Reamer used (mm)	Intraoperative Press-fit (mm)
52	52	2
52	53	1

Note
Appropriate reaming should be based upon the patient's bone quality and determined by the surgeon intraoperatively.

Note
Position the Shell such that the medioventral cutout aligns with the incisura acetabuli.

One slight tap on the Impactor Handle 184-330/00 is used to position the Shell into the prepared acetabulum (Fig. 13).

Note
The Impactor Handle 184-330/00 with the mounted Impaction Expander is not suitable for final impaction.

The equator (border of polished rim) of the Shell should be parallel to the acetabulum entrance plane for secure seating in the surrounding bone (Fig. 14). The Final Shell Impactor is mounted on the Impactor Handle 183-150/03 (Fig. 15) in order to drive the Shell into the final position by impacting the Shell ground.
Before final impaction the alignment of the Shell may be adjusted by using the Rim Impactor. For this purpose the Rim Impactor is mounted on the Impactor Handle 183-150/03 (Fig. 16).

Cemented Cup

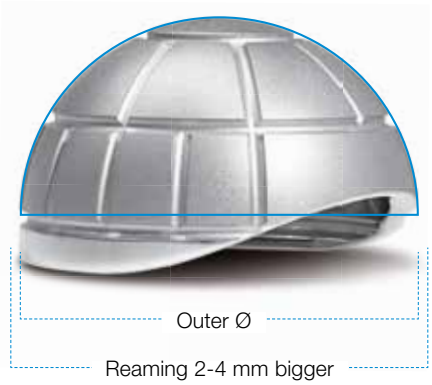

Inserting anchoring holes for bone cement primarily in the load-bearing zone of the acetabulum is recommended.

To enable a sufficiently thick cement mantle, the final implant is to be selected 2-4 mm smaller than the last applied Acetabular Reamer.

Fig. 17

Following application of the cement, the Cemented Cup is to be inserted into the prepared implant bed using the Impactor Handle 184-330/00 with the Impaction Expander mounted as described in the prior section. The surplus of the cement has to be removed (Fig. 17).

Once the Shell is in its desired position, disconnect the Impactor Handle 184-330/00. Slightly push against the Handle when opening the lever.
The alignment of the Shell may be adjusted by using the Rim Impactor. For this purpose the Rim Impactor is mounted on the Impactor Handle 183-150/03.

Fig. 18

The Final Shell Impactor is mounted on the Impactor Handle 183-150/03 (Fig. 18).

Fig. 19

While the cement hardens, the BiMobile Cup is held in position with the Final Shell Impactor. The design of Final Shell Impactor prevents the transmission of the surgeon's movements to the implant (Fig. 19).

During the hardening process of the cement, the remaining surplus of cement has to be removed.

The following steps are identical to the operation technique of the Cementless Cup.

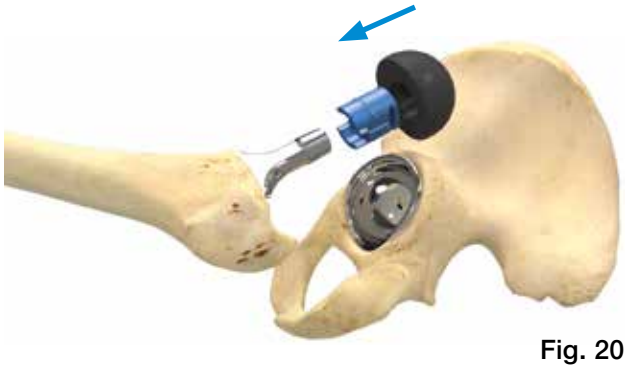

Fig. 20

Trial Reduction

Option 1

Select the appropriate Plastic Trial Sleeve and seat it inside the Trial Liner that corresponds to the implanted cup size which is also supported by a color coding (Fig. 20). The length of the Trial Sleeve should correspond to the head neck length of the prosthesis head.

Note
Implant identification must be made using laser marked information. Color coding is used only as a secondary reference. There may be slight variations in colors between components.

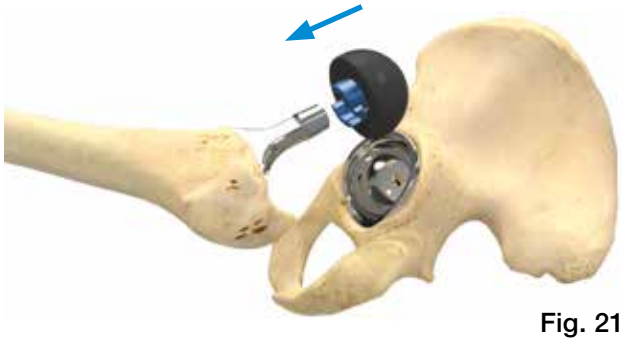

Fig. 21

Place the assembled Trial Liner and Sleeve onto the broach from the stem system or on final femoral implant (Fig. 21).

Fig. 22

After reduction of the Joint, the leg length, joint stability and range of motion is checked (Fig. 22).

Note
Prosthesis stems with classic long taper and/or unfavourable neck design can reduce the range of motion.

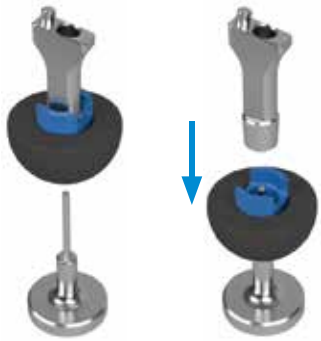

Fig. 23

Note
In case the modular Trial Neck of the femoral implant system is stuck in the Plastic Trial Sleeve use the Disassembly Support as shown in Fig. 23.

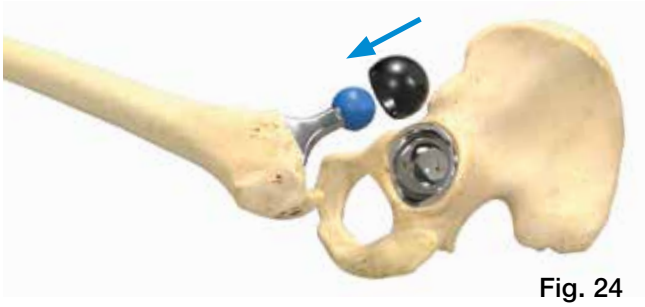

Fig. 24

Option 2

Select the appropriate Plastic Trial Head and place it onto the femoral rasp from the stem system or on the final femoral implant (Fig. 24).

Fig. 25

Place the Trial Liner that corresponds to the implanted cup size which is supported by a color coding onto the Plastic Trial Head (Fig. 25).

Note
The inner Diameter of the Trial Liner is adjusted to Ø 28 mm. The final size of the prosthesis head may differ from the Plastic Trial Head. This does influence neither the range of motion nor the head neck length of the implant.

Note
Implant identification must be made using laser marked information. Color coding is used only as a secondary reference. There may be slight variations in colors between components.

Fig. 26

After reduction of the joint, the leg length, joint stability and range of motion is checked (Fig. 26).

Note
Prosthesis stems with classic long taper and/or unfavourable neck design can reduce the range of motion.

Assembly of Prosthesis Head and Liner

Place the Base of the Press on the instrumentation table.

Fig. 27 Slide the Press into the Base (Fig. 27).

Fig. 28 Mount the Prosthesis Head Adapter Support onto the Press (Fig. 28).

Fig. 29 Place the femoral head on the Prosthesis Head Adapter Support (Fig. 29).

Fig. 30 Open the press completely by rotating the press Handle counterclockwise. Position and place the Liner on the head (Fig. 30).

Fig. 31

Rotate the Press Handle clockwise until the Liner is forced onto the head (Fig. 31).

A distinctive “pop” sound should be heard.

Fig. 32

Once this sound is heard, rotate the Press Handle counterclockwise to open the Press (Fig. 32).

Check whether the femoral head rotates freely in the Liner. If the head does not rotate freely use the Press again.

Fig. 33

Impaction of assembled Prosthesis Head and Liner
Place the assembled Prosthesis Head and Liner on the cleaned taper of the femoral stem and fix it with a light tap on the Head Impactor (Fig. 33).

Fig. 34

Final Reduction
Reduce the assembled Prosthesis Head and Liner into the cleaned Shell with help of the Head Impactor (Fig. 34).

Check for joint stability and range of motion (Fig. 35).

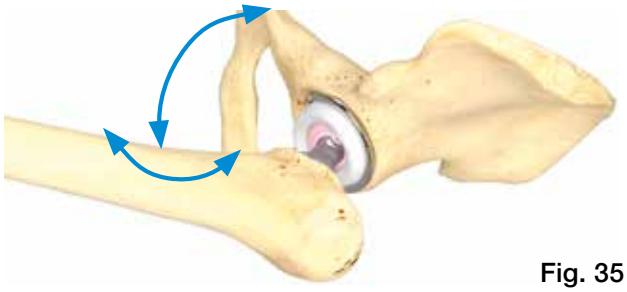

Fig. 35

Removal of the Shell
If the Shell has to be revised, loosen the peripheral fixation with an osteotome. Remove the Shell manually.

Note
Do not use the Impactor Handle 184-330/00 with attached Impaction Expander to revise the Shell.

Removal of the Liner
The Liner cannot be removed seperately. Instead remove the assembled Prosthesis Head and Liner from the femoral implant.

BiMobile Dual Mobility System – Shells, Cemented

Shell, Cemented
MAT EndoDur (CoCrMo alloy)

Shell REF	Outer Ø mm
184-001/42	42
184-001/44	44
184-001/46	46
184-001/48	48
184-001/50	50
184-001/52	52
184-001/54	54
184-001/56	56
184-001/58	58
184-001/60	60
184-001/62	62
184-001/64	64
184-001/66	66
184-001/68	68
184-001/70	70

Shell, cemented, with LINK PorEx (TiNbN = Titanium Niobium Nitride) for metal sensitive patients available on request as a custom-made implant.

BiMobile Dual Mobility System – Shells, Cementless

TiCaP Shell, Cementless
MAT EndoDur (CoCrMo alloy),
TiCaP Double Coating
(Titanium Plasma Spray / calcium phosphate CaP)

Shell REF	Outer Ø mm
184-101/42	42
184-101/44	44
184-101/46	46
184-101/48	48
184-101/50	50
184-101/52	52
184-101/54	54
184-101/56	56
184-101/58	58
184-101/60	60
184-101/62	62
184-101/64	64
184-101/66	66
184-101/68	68
184-101/70	70

Shell, cementless, with LINK PorEx (TiNbN = Titanium Niobium Nitride) for metal sensitive patients available on request as a custom-made implant.

BiMobile Dual Mobility System – Liner

Liner
MAT UHMWPE

Liner REF	Inner Ø mm	For Shell Ø mm
184-250/01	22	42
184-250/02	22	44
184-250/03	22	46
184-260/01	28	48
184-260/02	28	50
184-260/03	28	52
184-260/04	28	54
184-260/05	28	56
184-260/06	28	58
184-260/07	28	60
184-260/08	28	62
184-260/09	28	64
184-260/10	28	66
184-260/11	28	68
184-260/12	28	70

BiMobile Dual Mobility System – Liner

Liner

MAT E-Dur (Vitamin E blended Highly Crosslinked UHMWPE)

Liner REF	Inner Ø mm	For Shell Ø mm
184-270/01	22	42
184-270/02	22	44
184-270/03	22	46
184-280/01	28	48
184-280/02	28	50
184-280/03	28	52
184-280/04	28	54
184-280/05	28	56
184-280/06	28	58
184-280/07	28	60
184-280/08	28	62
184-280/09	28	64
184-280/10	28	66
184-280/11	28	68
184-280/12	28	70

184-110/04 **Instrument Set 1** for BiMobile Dual Mobility System

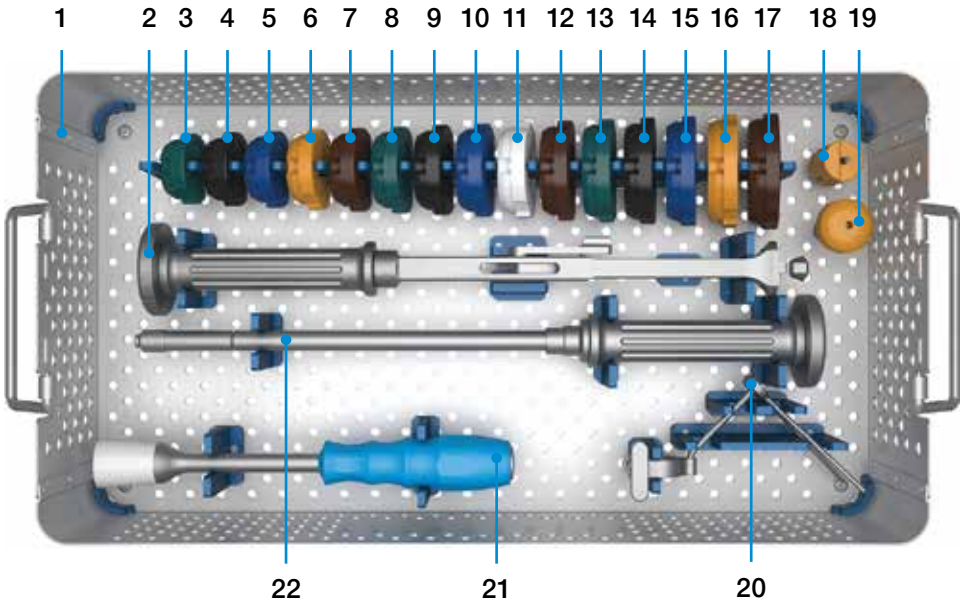

1	184-110/11	**Instrument Tray,** empty
2	184-330/00	**Impactor Handle**
3	184-352/42	**Impaction Expander,** Ø 42 mm, green
4	184-352/44	**Impaction Expander,** Ø 44 mm, black
5	184-352/46	**Impaction Expander,** Ø 46 mm, blue
6	184-352/48	**Impaction Expander,** Ø 48 mm, yellow
7	184-352/50	**Impaction Expander,** Ø 50 mm, brown
8	184-352/52	**Impaction Expander,** Ø 52 mm, green
9	184-352/54	**Impaction Expander,** Ø 54 mm, black
10	184-352/56	**Impaction Expander,** Ø 56 mm, blue
11	184-352/58	**Impaction Expander,** Ø 58 mm, grey
12	184-352/60	**Impaction Expander,** Ø 60 mm, brown
13	184-352/62	**Impaction Expander,** Ø 62 mm, green
14	184-352/64	**Impaction Expander,** Ø 64 mm, black
15	184-352/66	**Impaction Expander,** Ø 66 mm, blue
16	184-352/68	**Impaction Expander,** Ø 68 mm, yellow
17	184-352/70	**Impaction Expander,** Ø 70 mm, brown
18	184-135/10	**Rim Impactor**
19	183-135/10	**Final Shell Impactor**
20	184-331/00	**Alignment Guide**
21	175-360	**Impactor for Prosthesis Heads,** 280mm
22	183-150/03	**Impactor Handle**

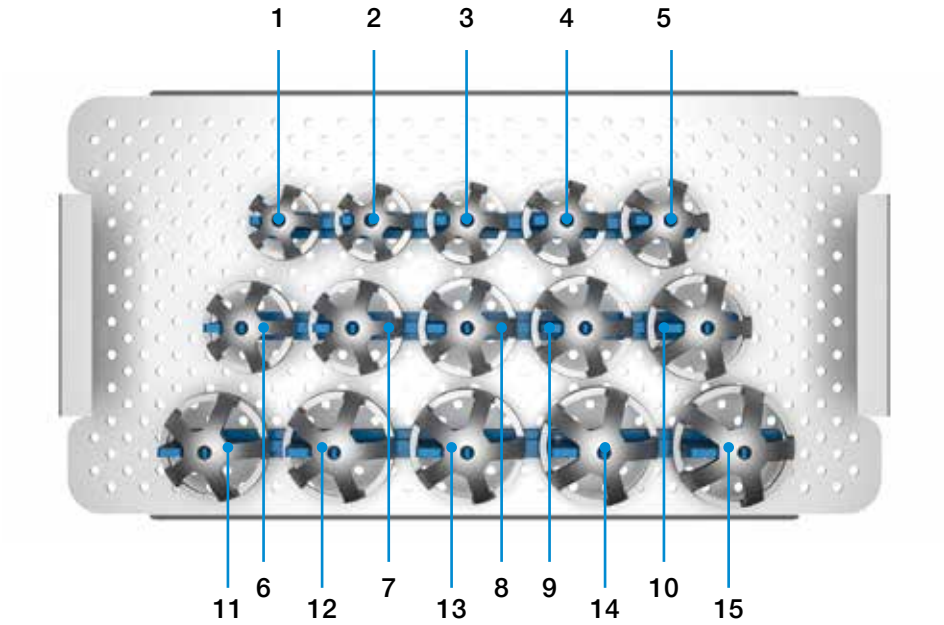

1	183-135/42	**Trial Cup,** Ø 42 mm
2	183-135/44	**Trial Cup,** Ø 44 mm
3	183-135/46	**Trial Cup,** Ø 46 mm
4	183-135/48	**Trial Cup,** Ø 48 mm
5	183-135/50	**Trial Cup,** Ø 50 mm
6	183-135/52	**Trial Cup,** Ø 52 mm
7	183-135/54	**Trial Cup,** Ø 54 mm
8	183-135/56	**Trial Cup,** Ø 56 mm
9	183-135/58	**Trial Cup,** Ø 58 mm
10	183-135/60	**Trial Cup,** Ø 60 mm
11	183-135/62	**Trial Cup,** Ø 62 mm
12	183-135/64	**Trial Cup,** Ø 64 mm
13	183-135/66	**Trial Cup,** Ø 66 mm
14	183-135/68	**Trial Cup,** Ø 68 mm
15	183-135/70	**Trial Cup,** Ø 70 mm

184-110/02 **Instrument Set 2 (Option 1)** for BiMobile Dual Mobility System

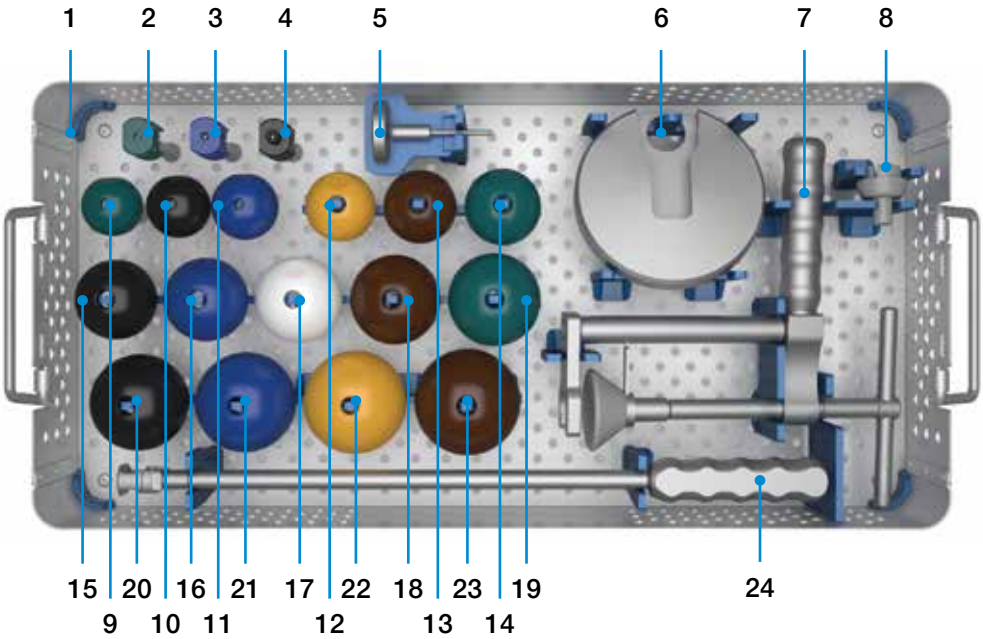

1	184-110/12	**Instrument Tray,** empty
2	106-020/01	**Plastic Trial Sleeve,** size S, short, green
3	106-020/02	**Plastic Trial Sleeve,** size M, medium, blue
4	106-020/03	**Plastic Trial Sleeve** size L, long, black
5	15-1099	**Disassembly Support**
6	184-361/00	**Base for press**
7	184-360/00	**Press**
8	184-362/00	**Adapter Base for Prosthesis Head**
9	184-320/42	**Trial Liner,** Ø 42 mm, green
10	184-320/44	**Trial Liner,** Ø 44 mm, black
11	184-320/46	**Trial Liner,** Ø 46 mm, blue
12	184-320/48	**Trial Liner,** Ø 48 mm, yellow
13	184-320/50	**Trial Liner,** Ø 50 mm, brown
14	184-320/52	**Trial Liner,** Ø 52 mm, green
15	184-320/54	**Trial Liner,** Ø 54 mm, black
16	184-320/56	**Trial Liner,** Ø 56 mm, blue
17	184-320/58	**Trial Liner,** Ø 58 mm, grey
18	184-320/60	**Trial Liner,** Ø 60 mm, brown
19	184-320/62	**Trial Liner,** Ø 62 mm, green
20	184-320/64	**Trial Liner,** Ø 64 mm, black
21	184-320/66	**Trial Liner,** Ø 66 mm, blue
22	184-320/68	**Trial Liner,** Ø 68 mm, yellow
23	184-320/70	**Trial Liner,** Ø 70 mm, brown
24	106-007/00	**Handle for Cup Trial**

184-110/03 **Instrument Set 2 (Option 2)** for BiMobile Dual Mobility System

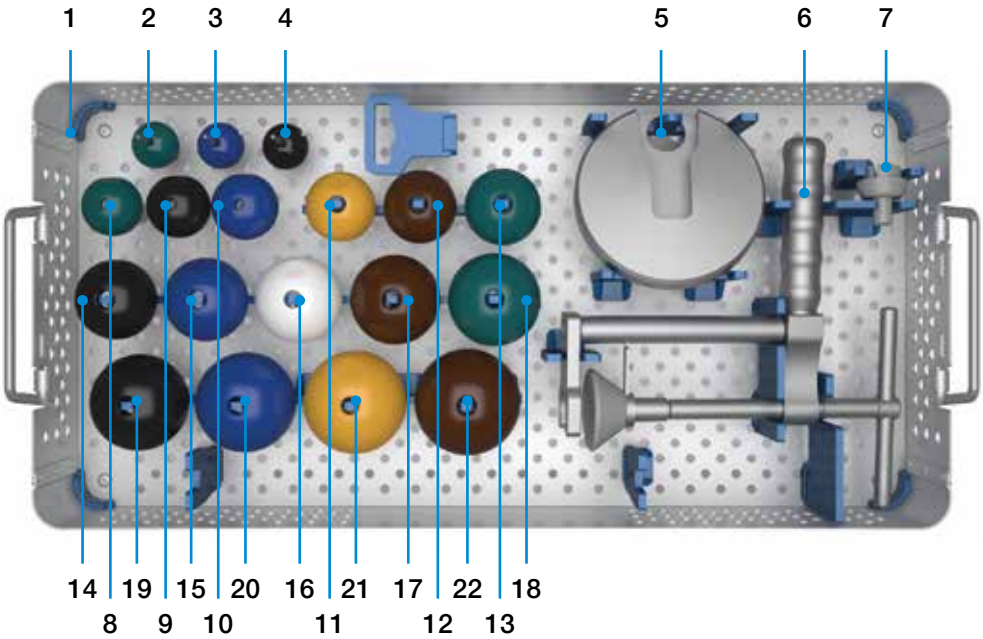

1	184-110/12	**Instrument Tray,** empty
2	175-928/11	**Plastic Trial Head,** Ø 28 mm, size S, short, green
3	175-928/12	**Plastic Trial Head,** Ø 28 mm, size M, medium, blue
4	175-928/13	**Plastic Trial Head,** Ø 28 mm, size L, long, black
5	184-361/00	**Base for press**
6	184-360/00	**Press**
7	184-362/00	**Adapter Base for Prosthesis Head**
8	184-321/42	**Trial Liner,** Ø 42 mm, green, for Ø 28mm Plastic Trial Heads
9	184-321/44	**Trial Liner,** Ø 44 mm, black, for Ø 28mm Plastic Trial Heads
10	184-321/46	**Trial Liner,** Ø 46 mm, blue, for Ø 28mm Plastic Trial Heads
11	184-321/48	**Trial Liner,** Ø 48 mm, yellow, for Ø 28mm Plastic Trial Heads
12	184-321/50	**Trial Liner,** Ø 50 mm, brown, for Ø 28mm Plastic Trial Heads
13	184-321/52	**Trial Liner,** Ø 52 mm, green, for Ø 28mm Plastic Trial Heads
14	184-321/54	**Trial Liner,** Ø 54 mm, black, for Ø 28mm Plastic Trial Heads
15	184-321/56	**Trial Liner,** Ø 56 mm, blue, for Ø 28mm Plastic Trial Heads
16	184-321/58	**Trial Liner,** Ø 58 mm, grey, for Ø 28mm Plastic Trial Heads
17	184-321/60	**Trial Liner,** Ø 60 mm, brown, for Ø 28mm Plastic Trial Heads
18	184-321/62	**Trial Liner,** Ø 62 mm, green, for Ø 28mm Plastic Trial Heads
19	184-321/64	**Trial Liner,** Ø 64 mm, black, for Ø 28mm Plastic Trial Heads
20	184-321/66	**Trial Liner,** Ø 66 mm, blue, for Ø 28mm Plastic Trial Heads
21	184-321/68	**Trial Liner,** Ø 68 mm, yellow, for Ø 28mm Plastic Trial Heads
22	184-321/70	**Trial Liner,** Ø 70 mm, brown, for Ø 28mm Plastic Trial Heads

optional

132-922/01	**Plastic Trial Heads,** Ø 22 mm, size S, short, green
132-922/02	**Plastic Trial Heads,** Ø 22 mm, size M, medium, blue
184-322/42	**Trial Liner,** Ø 42 mm, green, for Ø 22mm Plastic Trial Heads
184-322/44	**Trial Liner,** Ø 44 mm, black, for Ø 22mm Plastic Trial Heads
184-322/46	**Trial Liner,** Ø 46 mm, blue, for Ø 22mm Plastic Trial Heads

132-260/01 Instrument Set for LINK Acetabular Reamers

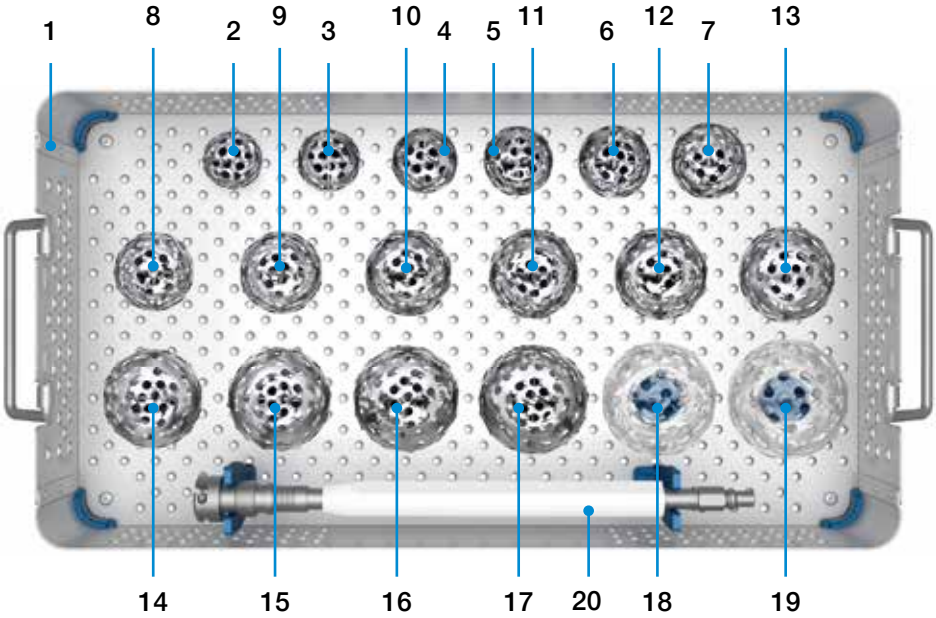

1	132-260/10	**Instrument Tray,** empty
2	131-170/38	**Acetabular Reamer Heads,** Reamer-Ø 38 mm
3	131-170/40	**Acetabular Reamer Heads,** Reamer-Ø 40 mm
4	131-170/42	**Acetabular Reamer Heads,** Reamer-Ø 42 mm
5	131-170/44	**Acetabular Reamer Heads,** Reamer-Ø 44 mm
6	131-170/46	**Acetabular Reamer Heads,** Reamer-Ø 46 mm
7	131-170/48	**Acetabular Reamer Heads,** Reamer-Ø 48 mm
8	131-170/50	**Acetabular Reamer Heads,** Reamer-Ø 50 mm
9	131-170/52	**Acetabular Reamer Heads,** Reamer-Ø 52 mm
10	131-170/54	**Acetabular Reamer Heads,** Reamer-Ø 54 mm
11	131-170/56	**Acetabular Reamer Heads,** Reamer-Ø 56 mm
12	131-170/58	**Acetabular Reamer Heads,** Reamer-Ø 58 mm
13	131-170/60	**Acetabular Reamer Heads,** Reamer-Ø 60 mm
14	131-170/62	**Acetabular Reamer Heads,** Reamer-Ø 62 mm
15	131-170/64	**Acetabular Reamer Heads,** Reamer-Ø 64 mm
16	131-170/66	**Acetabular Reamer Heads,** Reamer-Ø 66 mm
17	131-170/68	**Acetabular Reamer Heads,** Reamer-Ø 68 mm
18	131-170/70*	**Acetabular Reamer Heads,** Reamer-Ø 70 mm
19	131-170/72*	**Acetabular Reamer Heads,** Reamer-Ø 72 mm
20	131-171B**	**Shaft with Handle** for Acetabular Reamer, 312 mm, fittings optional
	131-171/01	**Handle** for 131-171B - H

* On request (not included in set configuration 132-260/01)
** How to order: 131-171E = with Jacobs Chuck fitting

B	**D**	**E**
Hudson	AO	Jacobs Chuck

132-260/02 Instrument Set for LINK Acetabular Reamers

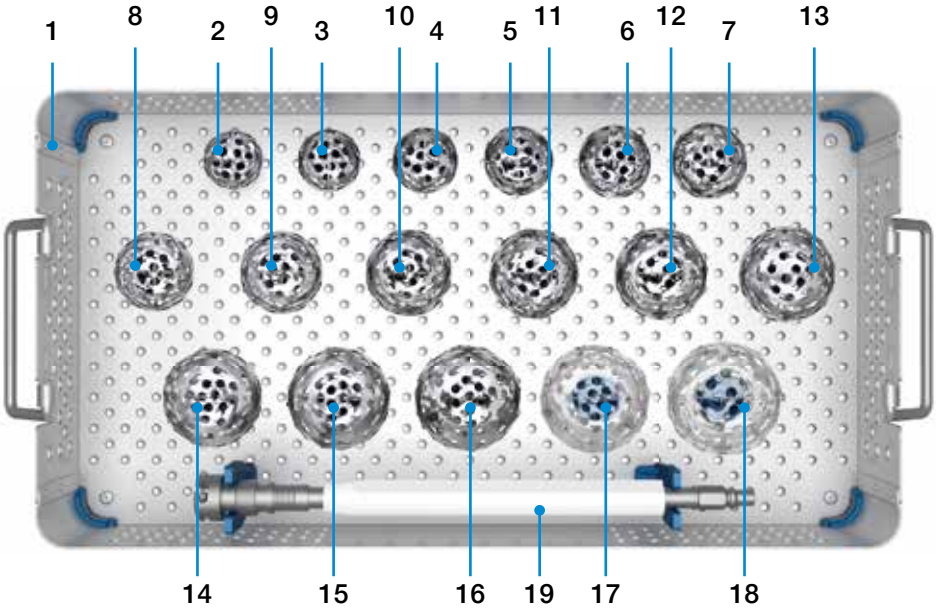

1	132-260/11	**Instrument Tray,** empty
2	131-170/41	**Acetabular Reamer Head,** Reamer-Ø 41 mm
3	131-170/43	**Acetabular Reamer Head,** Reamer-Ø 43 mm
4	131-170/45	**Acetabular Reamer Head,** Reamer-Ø 45 mm
5	131-170/47	**Acetabular Reamer Head,** Reamer-Ø 47 mm
6	131-170/49	**Acetabular Reamer Head,** Reamer-Ø 49 mm
7	131-170/51	**Acetabular Reamer Head,** Reamer-Ø 51 mm
8	131-170/53	**Acetabular Reamer Head,** Reamer-Ø 53 mm
9	131-170/55	**Acetabular Reamer Head,** Reamer-Ø 55 mm
10	131-170/57	**Acetabular Reamer Head,** Reamer-Ø 57 mm
11	131-170/59	**Acetabular Reamer Head,** Reamer-Ø 59 mm
12	131-170/61	**Acetabular Reamer Head,** Reamer-Ø 61 mm
13	131-170/63	**Acetabular Reamer Head,** Reamer-Ø 63 mm
14	131-170/65	**Acetabular Reamer Head,** Reamer-Ø 65 mm
15	131-170/67	**Acetabular Reamer Head,** Reamer-Ø 67 mm
16	131-170/69	**Acetabular Reamer Head,** Reamer-Ø 69 mm
17	131-170/71*	**Acetabular Reamer Head,** Reamer-Ø 71 mm
18	131-170/73*	**Acetabular Reamer Head,** Reamer-Ø 73 mm
19	131-171B**	**Shaft with Handle** for Acetabular Reamer, 312 mm, fittings optional
	131-171/01	**Handle** for 131-171B - H

* On request (not included in set configuration 132-260/02)
** How to order: 131-171E = with Jacobs Chuck fitting

B	**D**	**E**
Hudson	AO	Jacobs Chuck

Additional Instruments

Penetrating Drill
with depth stop, 150 mm
optional fittings

REF	Drill Ø/mm
130-311/35	3.5
130-311/50	5.0

				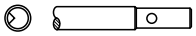
B	**C**	**D**	**E**	**F**
Hudson	Harris	AO	Jacobs Chuck	Trinkle

Order example
130-311/35B = with Hudson fitting
130-311/35C = with Harris fitting
130-311/35D = with AO fitting
130-311/35E = with Jacobs Chuck fitting
130-311/35F = with Trinkle fitting

130-311/05 **Cement Hole Puncher**

Accessories

X-ray Templates for LINK BiMobile Dual Mobility System
15 sheets, 110% actual size

REF	X-ray templates
184-400/00	**for BiMobile Dual Mobility System,** cementless
184-410/00	**for BiMobile Dual Mobility System,** cemented

Instructions for Cleaning and Maintenance

Specific instructions for instruments are available on request from customer@linkhh.de

For more information please register for our LINK Media Library (linkorthopaedics.com)

Specified Indications and Contraindications: BiMobile Dual Mobility System
General Indications
Mobility-limiting diseases, fractures or defects of the hip joint or proximal femur which cannot be treated by conservative or osteosynthetic procedures
Indications
Primary and secondary osteoarthritis
Rheumatoid arthritis
Correction of functional deformities
Avascular Necrosis
Femoral neck fractures
Revision after implant loosening dependent on bone mass and quality
Dislocation risks
Contraindications
Acute and chronic infections, local and systemic insofar as they compromise the successful implantation of a total hip prosthesis
Allergies to (implant) materials
Distinctive muscular-, nerve-, vascular or other diseases which put the affected limb at risk
Insufficient/inadequate bone mass- or quality which prevents a stable anchorage of the prosthesis

The device is intended for cemented and cementless use.

Please note
These indications/contraindications refer to standard cases. The ultimate decision on whether or not an implant is suitable for a patient must be made by the surgeon based on his/her individual analysis and his/her experience.

Note
Extra long head necks with a skirt should not be used. This may decrease the Range of Motion and may cause an impingement risk with the dual mobility liner.

Important Information

Please note the following regarding the use of our implants:

1. **Choosing the right implant is very important.**
   The size and shape of the human bone determines the size and shape of the implant and also limits the load capacity. Implants are not designed to withstand unlimited physical stress. Demands should not exceed normal functional loads.

2. **Correct handling of the implant is very important.**
   Under no circumstances should the shape of a finished implant be altered, as this shortens its life span. Our implants must not be combined with implants from other manufacturers. The instruments indicated in the Surgical Technique must be used to ensure safe implantation of the components.

3. **Implants must not be reused.**
   Implants are supplied sterile and are intended for single use only. Used implants must not be used again.

4. **After-treatment is also very important.**
   The patient must be informed of the limitations of the implant. The load capacity of an implant cannot compare with that of healthy bone!

5. **Unless otherwise indicated, implants are supplied in sterile packaging.**
   Note the following conditions for storage of packaged implants:
   - Avoid extreme or sudden changes in temperature.
   - Sterile implants in their original, intact protective packaging may be stored in permanent buildings up until the "Use by" date indicated on the packaging.
   - They must not be exposed to frost, dampness or direct sunlight, or mechanical damage.
   - Implants may be stored in their original packaging for up to 5 years after the date of manufacture. The "Use by" date is indicated on the product label.
   - Do not use an implant if the packaging is damaged.

6. **Traceability is important.**
   Please use the documentation stickers provided to ensure traceability.

7. **Further information** on the material composition is available on request from the manufacturer.

Follow the instructions for use!

Waldemar Link GmbH & Co. KG, Hamburg

All content in this catalog, including text, pictures and data, is protected by law. Every instance of use, whether in part or in whole and which is not permitted by law, is subject to our prior consent. In particular, this applies to the reproduction, editing, translation, publishing, saving, processing, or passing on of content stored in databases or other electronic media and systems, in any manner or form. The information in the catalogs is solely intended to describe the products and does not constitute a guarantee.

The Surgical Technique described has been written to the best of our knowledge and belief, but it does not relieve the surgeon of his/her responsibility to duly consider the particularities of each individual case.

Products shown in this document may not be available in your country. The product availability is subject to the approval and/or registration regulations of the respective country. Please contact Waldemar Link GmbH & Co. KG if you have questions about the availability of LINK products in your country.

Waldemar Link GmbH & Co. KG and/or other corporate affiliated entities own, use or have applied for the following trademarks in many jurisdictions: LINK, BiMobile, SP II, Modell Lubinus, E-Dur, EndoDur, T.O.P. II, BetaCup, CombiCup PF, CombiCup SC, CombiCup R, MobileLink, C.F.P., LCU, SP-CL, LCP, MIT-H, Endo-Model, Endo-Model SL, MP, MEGASYSTEM-C, GEMINI SL, SPAR-K, LCK, Link OptiStem, HX, TiCaP, X-LINKed, PorAg, LINK PorEx, BiPorEx, PorEx-Z, TrabecuLink, Tilastan, customLINK, RescueSleeve, Stactip, VACUCAST.

Other trademarks and trade names may be used in this document to refer to either the entities claiming the marks and/or names or their products and are the property of their respective owners.

© LINK • 6781_BiMobile_OP-Impl-Instr_en_2020-05_005

Waldemar Link GmbH & Co. KG
Barkhausenweg 10 · 22339 Hamburg · Germany
Phone +49 40 53995-0 · info@linkhh.de
www.linkorthopaedics.com